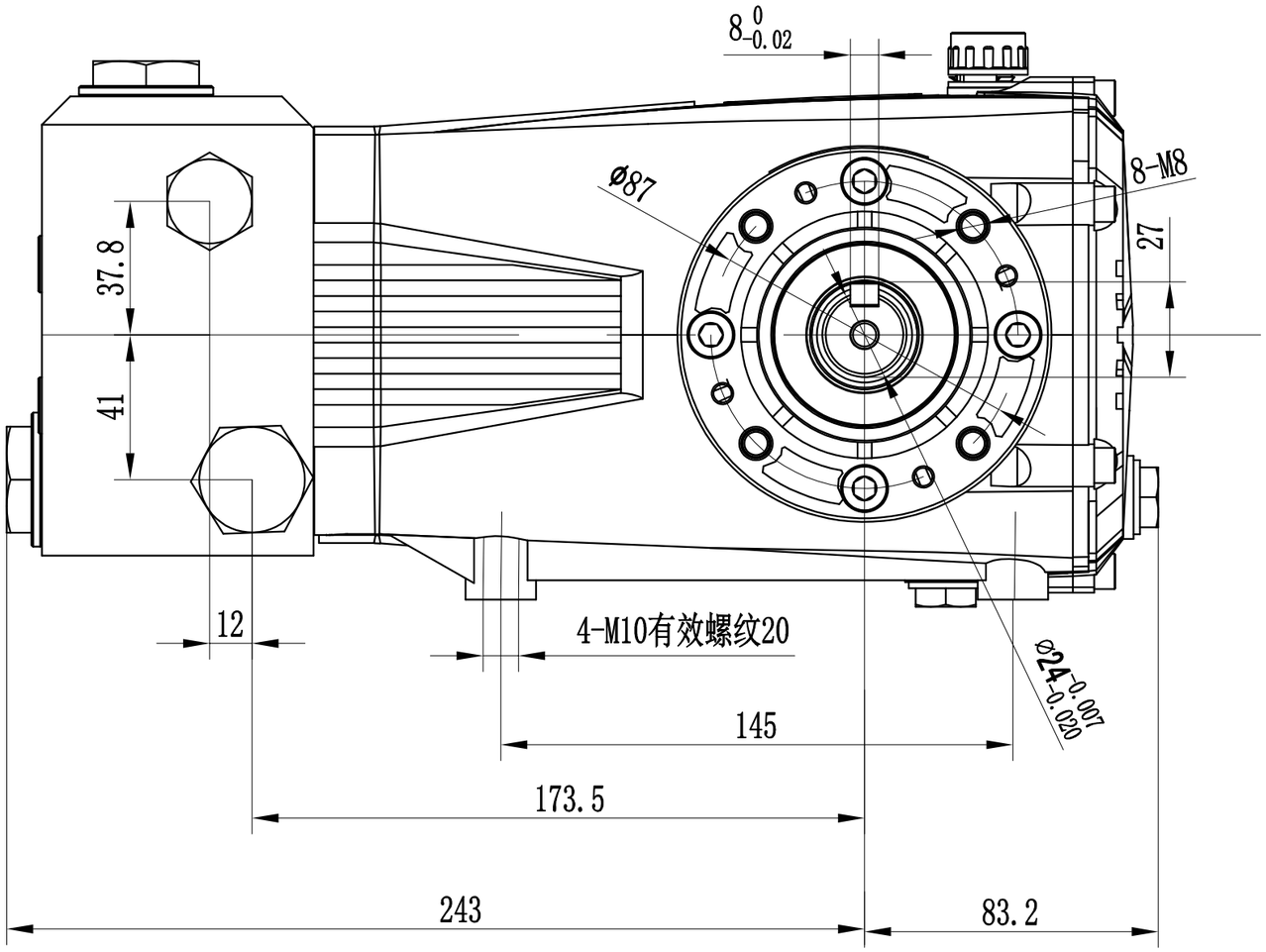
8 0 -0.02
Ø87
8-M8
27
37.8
41
12
4-M10有效螺纹20
Ø24 -0.007 -0.020
145
173.5
243
83.2

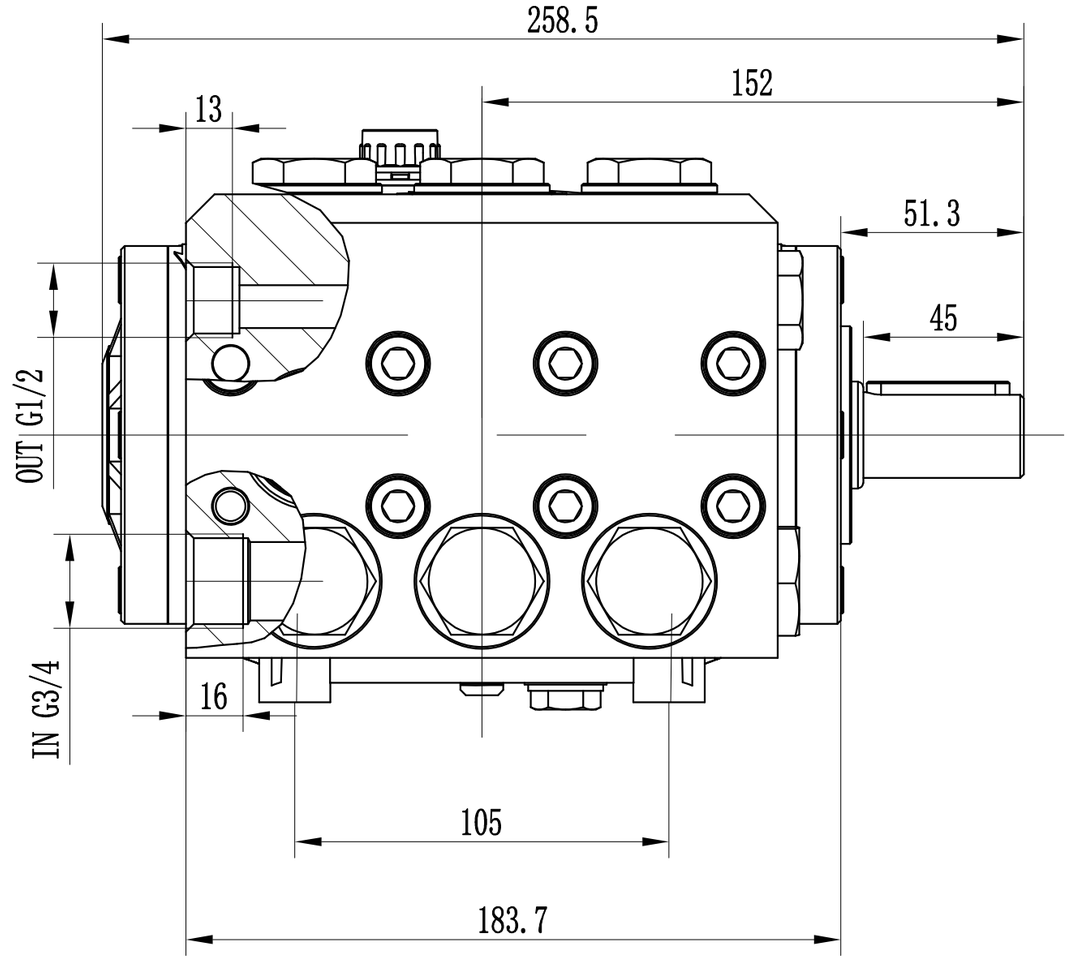
258.5
152
13
51.3
45
OUT G1/2
IN G3/4
16
105
183.7